18/SPRUE REMOVAL DIG.

Western Electric

TECHNICAL DIGEST NO. 1
JANUARY 1966

425-DIG.051

# MOLD GATE SEVERING APPARATUS

J. D. COLE

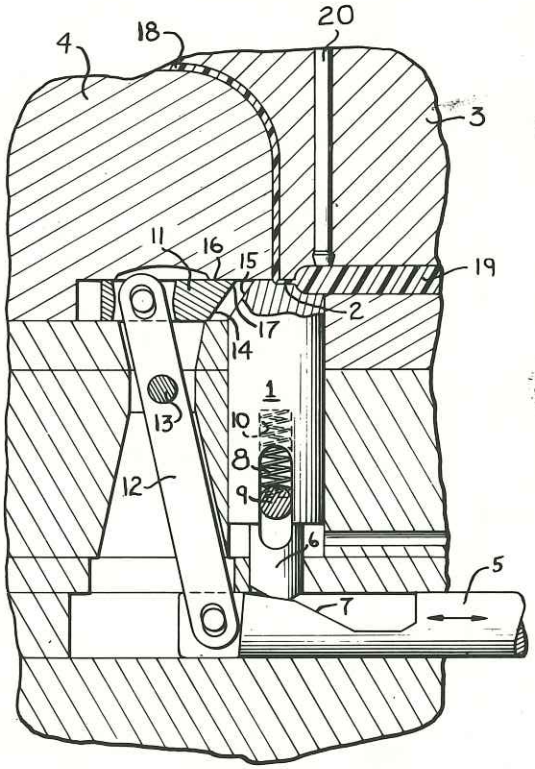


RECEIVED
FEB 14 1966
GROUP 320

In the above drawing there is depicted apparatus which permits severing of a mold gate prior to the opening of molding members which define a mold cavity. The apparatus includes a retractable member 1, the upper end 2 of which defines a portion of a mold cavity for the runner and gate. Mold members 3 and 4 define the main portion of the cavity. Normally, member 1 is held in a cavity defining position by means of a sliding cam 5.

After a molding operation has been completed, and prior to the opening of the mold members 3 and 4, slide cam 5 is moved to the left by suitable apparatus (not shown) such that a lower portion 6 of member 1 overlies a recessed portion 7 of the slide cam 5. When the lower portion 6 of member 1 overlies the recess 7 in the slide cam 5, member 1 is still held in a cavity defining relationship with mold members 3 and 4 through the action of a biasing spring 8. This spring is affixed at one end to a stationary pin 9 and is movable axially within a recess 10 of member 1.

Leftward movement of the slide cam 5 causes rightward movement of a shear blade 11 through the operation of a lever 12 which is pivotable about a stationary pivot pin 13. As the shear blade 11 is being advanced, a sloping end 14 thereof engages a sloping surface 15 on the upper portion 2 of member 1, and thereby cams the latter downward, against the force of the spring 8, and out of its normal gate defining position. The shear blade 11 then may be advanced along a surface 16 of mold member 4 such that a knife edge portion

17 thereof may engage and sever the gate at the point of entry of the plastic material into the molding cavity defined between the mold members 3 and 4. Thus, a molded article 18 may be severed from the plastic scrap 19 which comprises the gate and runner to the mold cavity. The mold members 3 and 4 may thereafter be opened, with the molded article 18 being ejected into one chute and the scrap 19 being ejected into a different chute by an ejector pin 20.

The return of slide cam 5 to the right causes shear blade 11 to retract and cam, member 1 back to its normal, elevated position wherein the upper portion 2 thereof again defines a portion of the cavity for the runner and the gate.